A Series Electric high-vacuum Butterfly Valve

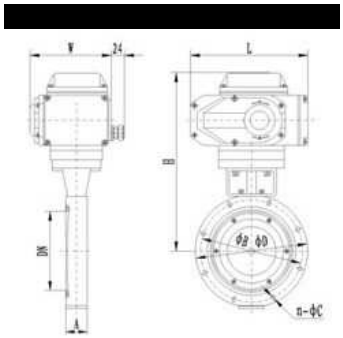

A Series Electric High-vacuum Butterfly Valve adopts the rotary electric, electronic regulation type valve drive device. It can fulfill the valve open,close or intermediate position control through externally-connected power source conversion (by manual indexing switch or computer control) or outer input signal. It is applicable for connecting or cutting off the airflow in vacuum tubes.
This series valve plate adopts the clamping structure. It tightly grips the valve plate seal ring. Apart from the capability of this valve being used in vacuum conditions, it can also bear certain pressure.

technical specification:

Scope (m.Bar)	$2x10^{7}$～$1.3x10^{-7}$
Valve Leakage Rate(m.Bar .L/S)	≤$1.3x10^{-8}$
Time for opening and closing the valve (S)	DN≤63 20；80≤DN≤200 30； DN≥250 48
Medium temperature（℃）	-25～+80(Sealing Material NBR) -30～+150(Sealing Material FPM)
Flange Standard	GB/T6070
Installation location	Random
Rated voltage	Standard manufacture：AC220V/50Hz Switch type Special designation：AC380V；DC24V Switch type
Signal Feedback	4～20mA DC Standard manufacture：Without passive contactor designation：4～20mA DC Adjustable

Dimensions：

Model	Nominal Diameter(DN)	ΦD	ΦB	H	A	L	W	n-ΦC
EBV-50A	50	110	90	218	26	160	113	4-Φ9
EBV -63A	63	130	110	229				
EBV -80A	80	145	125	272	32			8-Φ9
EBV -100A	100	165	145	282		196	121	
EBV -125A	125	200	175	300	35			8-Φ12
EBV -150A	150	225	200	369				
EBV -200A	200	285	260	399	45	255	158	12-Φ11
EBV -250A	250	335	310	427	50			
EBV -300A	300	425	395	471	55			12-Φ14
EBV -400A	400	510	480	546	60	310	207	16-Φ14

ph: +91-080-23327059 Mob: +91-9886726920,
e mail: support@uniquevacuum.co.in